Designing A Socially Assistive Autonomous Robot Car

Jesse Chen, jesche487@gmail.com
Mission San Jose High School, Class of 2021
USC Viterbi Department of Robotics Engineering, SHINE 2020

Introduction

The world of robotics is advancing at a rapid rate, and with its growth, many different usages have been found; in particular, socially assistive robots. These robots focus on aiding humans. shown in Professor Culbertson's research with haptic technology. This year at SHINE, I constructed my own socially assistive robot.

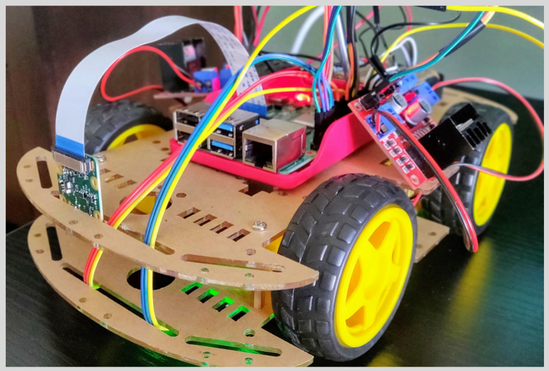

My Socially Assistive Robot Car
PC: Jesse Chen

Project Summary

Socially assistive robots can vary in shape and size, but they all have the common goal of providing aid. In my seven weeks, I created a service robot that can use QR codes to orient and align itself spatially, as well as displaying embedded information in the form of augmented reality.

Objective/Impact of Professor's Research and Relation to Project

Professor Culbertson works in the field of haptics, which aims to introduce artificial sense of touch to touchless situations in life [1] [2]. In the Haptics Robotics and Virtual Interaction (HaRVI) Laboratory, their goal is to research interactions to recreate touch to provide realism and productivity. The combination of haptics and my self-localizing robot can allow humans to remotely operate tasks using modules on the robot without having to worry about driving it.

Skills Learned

- Learned how to work with hardware
  - Soldering and Wiring, Circuitry
  - Worked with H-bridges, Encoders, wiring up motors and PiCamera
- Gained familiarity with Raspberry Pi
  - Learned the Raspberry Pi GPIO pinout
  - Coded the motors and PiCamera
  - Used Thonny Python IDE for scripting
  - Learned OpenCV to allow the detection of QR codes

XYΘ Robot Localization Axis PC: Jesse Chen

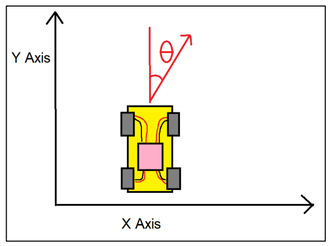

- Coded/Built the robot car's movement
  - Used encoders to help with error control while driving/turning
  - Used encoders to map the XYΘ coordinates through wheel rotations
  - Learned PID controllers
- Learned Unity
  - Learned the essentials of 3D Unity
  - Learned how to create Augmented Reality using the Vuforia Engine
  - Gained fluency in animation and animating augmented reality
  - Learned C# Scripting in Unity

Augmented Reality animation generated on top of a QR code within Unity
PC: Jesse Chen

- Communication
  - Learned how to IP stream the Raspberry Pi PiCamera
  - Learned how to use a virtual web camera to allow direct streaming into Unity
- Localization
  - Applied OpenCV QR code detection to calculate the distance between the robot and QR Code
- Hardware debugging, not JUST software!
- Learning effective communication

How It Works

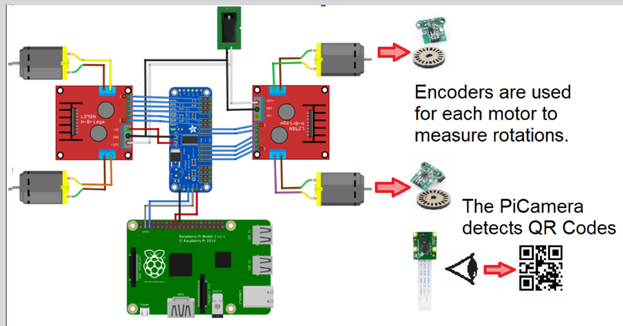

The robot is set to run on a closed loop with feedback control. The Raspberry Pi sends out commands to the motor to make the robot run. While it is running, the encoders read each motor and keep track of how many rotations each wheel has spun. If any error is noticed, such as one wheel spinning less than the others, the feedback is used to initiate error control to keep the robot on track.

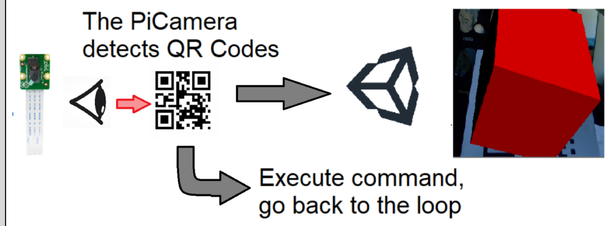

Once the camera detects a QR Code, it simultaneously generates the code's augmented reality within Unity from an IP camera stream, while the robot executes the embedded command before looping again.

How This Relates to Your STEM Coursework

SHINE impacted me in two significant ways: One, I learned the importance of working with hardware, and two, I gained insight in future career paths. The first time I encountered a challenge in my project I assumed it was a software issue. In reality, I forgot to recharge the batteries. These experiences have taught me that hardware requires equal attention to detail as software, particularly in haptics [3]. SHINE also opened up my eyes to career paths. Professor Culbertson and my mentor Naghmeh Zamani showed me how they utilized their computer science skills to aid people in need. In the future, I will definitely aim to help mankind with my research.

Next Steps, Advice for Future SHINE Students, Citations

I plan to use my experiences and skills learned at SHINE to further improve and perfect my robot. I will research the possible applications of my robot in different fields, such as in medicine, service industry, and firefighting.

For any future SHINE students, I will say that knowing how to self-learn is the most important tool you can have.

[1]Culbertson, H., Schorr, S. B., & Okamura, A. M. (2018, January 29). Haptics: The Present and Future of Artificial Touch Sensations. Retrieved July 06, 2020, from https://www.annualreviews.org/doi/abs/10.1146/annurev-control-060117-105043
[2] Hayward, V., & Maclean, K. E. (2007, December). Do It Yourself Haptics: Part I. Retrieved May 21, 2020, from https://ieeexplore.ieee.org/document/4437756
[3]Maclean, K. E., & Hayward, V. (2008, March). Do It Yourself Haptics: Part II Interaction Design. Retrieved May 21, 2020, from https://ieeexplore.ieee.org/document/4476335

Acknowledgements

I would like to give the most utmost thanks to Professor Culbertson and Naghmeh Zamani for guiding me through SHINE. I would also like to thank Dr. Mills for being a wonderful role model that is always open for conversation.